Tikrit University

COLLAGE OF COMPUTER SCIENCE AND MATHEMATICS

Computer Networking

MULTIPLEXING

4th stage

Lecturer 4

Majid Hamid Ali

1. MULTIPLEXING

Whenever the bandwidth of a medium linking two devices is greater than the bandwidth needs of the devices, the link can be shared.

Multiplexing is the set of techniques that allow the simultaneous transmission of multiple signals across a single data link. As data and telecommunications use increases, so does traffic. We can accommodate this increase by continuing to add individual links each time a new channel is needed; or we can install higher-bandwidth links and use each to carry multiple signals.

Today's technology includes high-bandwidth media such as optical fiber and terrestrial and satellite microwaves. Each has a bandwidth far in excess of that needed for the average transmission signal. If the bandwidth of a link is greater than the bandwidth needs of the devices connected to it, the bandwidth is wasted. An efficient system maximizes the utilization of all resources; bandwidth is one of the most precious resources we have in data communications.

In a multiplexed system, ***n*** lines share the bandwidth of one link. the basic format of a multiplexed system. The lines on the left direct their transmission streams to a **multiplexer** (**MUX**), which combines them into a single stream (many-toone). At the receiving end, that stream is fed into a **demultiplexer** (**DEMUX**), which separates the stream back into its component transmissions (one-to-many) and directs them to their corresponding lines. In the figure, the word **link** refers to the physical path. The word **channel** refers to the portion of a link that carries a transmission between a given pair of lines. One link can have many (n) channels.

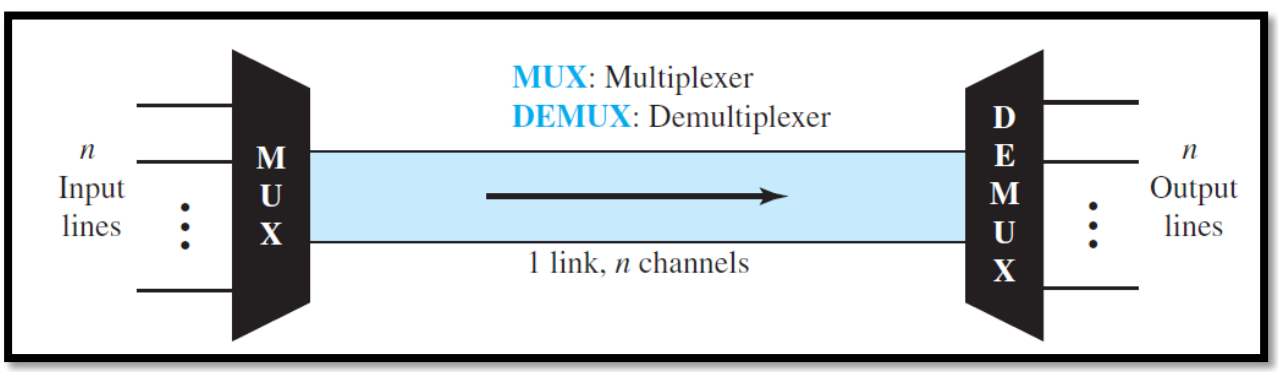

Figure 1. *Dividing a link into channels*

Advantages of Multiplexing

1. More than one signal can be sent over a single medium.
2. The bandwidth of a medium can be utilized effectively.
3. Large capacities and scalable.
4. Simple and easy.

Why to use Multiplexing?

1. If no multiplexing is used between the users at two different sites that are distance apart, then separate communication lines would be required.
2. This is not only costly but also become difficult to manage. If multiplexing is used then, only one line is required. This leads to the reduction in the line cost and also it would be easier to keep track of one line than several lines.
3. If there are multiple signals to share one medium, then the medium must be divided in such a way that each signal is given some portion of the available bandwidth.
4. For example: If there are 10 signals and bandwidth of medium is100 units, then the 10 unit is shared by each signal.
5. When multiple signals share the common medium, there is a possibility of collision. Multiplexing concept is used to avoid such collision.

Types of Multiplexing

There are three basic multiplexing techniques: frequency-division multiplexing, wavelength-division multiplexing, and time-division multiplexing. The first two are techniques designed for analog signals, the third, for digital signals see Figure 2.

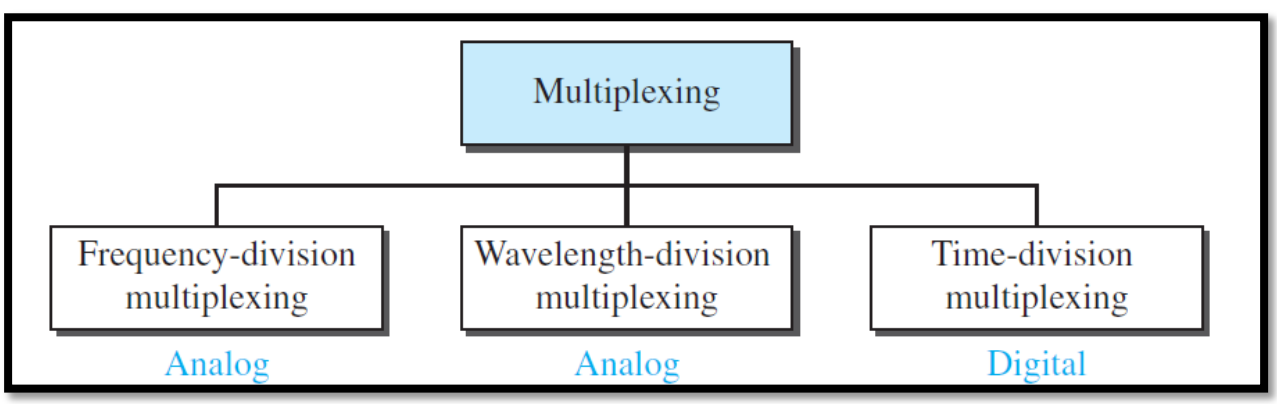

Figure 2. *Categories of multiplexing*

A. Frequency-Division Multiplexing

Frequency-division multiplexing (FDM) is an analog technique that can be applied when the bandwidth of a link (in hertz) is greater than the combined bandwidths of the signals to be transmitted. In FDM, signals generated by each sending device modulate different carrier frequencies. These modulated signals are then combined into a single composite signal that can be transported by the link. Carrier frequencies are separated by sufficient bandwidth to accommodate the modulated signal. These bandwidth ranges are the channels through which the various signals travel. Channels can be separated by strips of unused bandwidth—guard bands—to prevent signals from overlapping. In addition, carrier frequencies must not interfere with the original data frequencies.

the Figure 3 gives a conceptual view of FDM. In this illustration, the transmission path is divided into three parts, each representing a channel that carries one transmission.

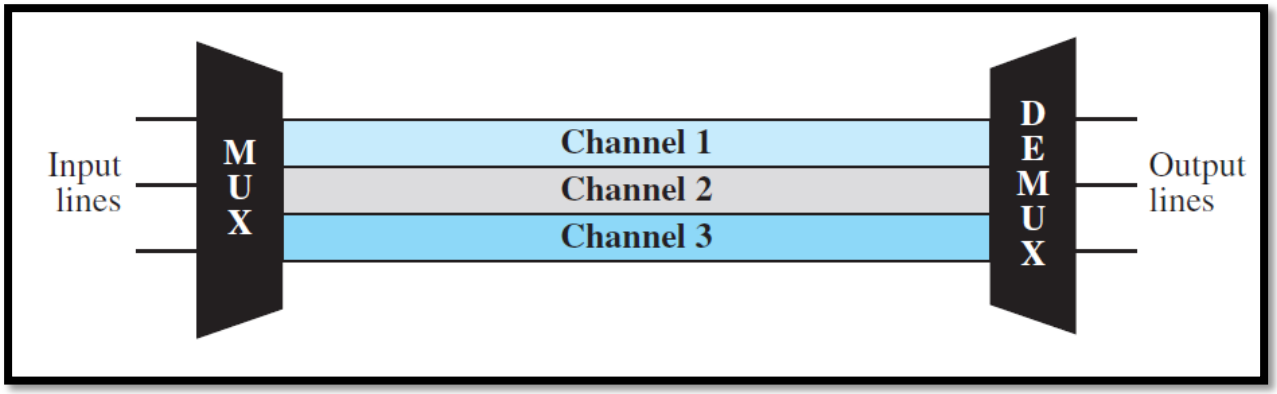

Figure 3. *Frequency-division multiplexing*

FDM is an analog multiplexing technique that combines analog signals.

We consider FDM to be an analog multiplexing technique; however, this does not mean that FDM cannot be used to combine sources sending digital signals. A digital signal can be converted to an analog signal before FDM is used to multiplex them.

Multiplexing Process

Figure 4 is a conceptual illustration of the multiplexing process. Each source generates a signal of a similar frequency range. Inside the multiplexer, these similar signals modulate different carrier frequencies (f1, f2, and f3). The resulting modulated signals are then combined into a single composite signal that is sent out over a media link that has enough bandwidth to accommodate it.

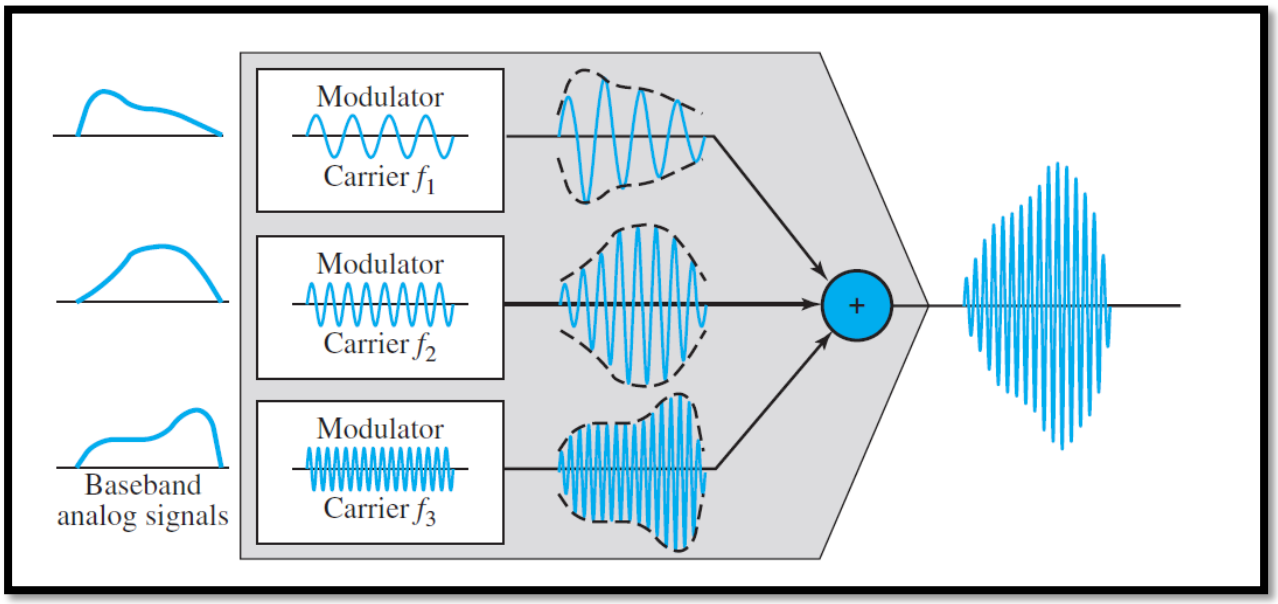

Figure 4. *FDM process*

Demultiplexing Process

The demultiplexer uses a series of filters to decompose the multiplexed signal into its constituent component signals. The individual signals are then passed to a demodulator that separates them from their carriers and passes them to the output lines. Figure 5 is a conceptual illustration of demultiplexing process.

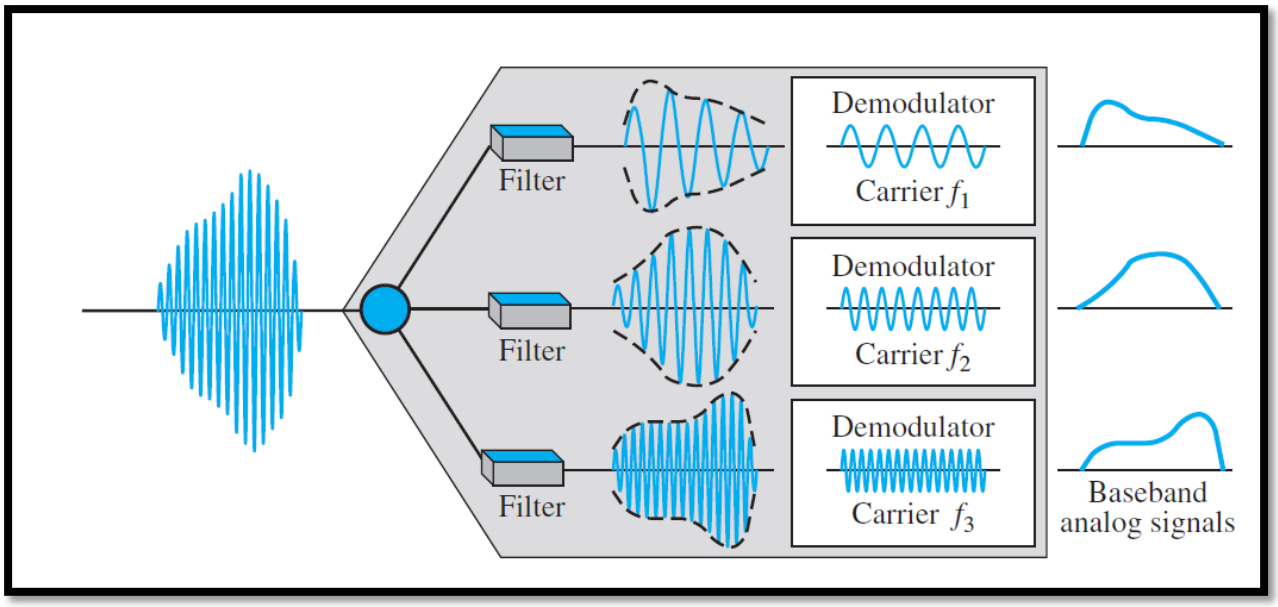

Figure 5 FDM demultiplexing example

Advantages of FDM:

1. A large number of signals (channels) can be transmitted simultaneously.
2. FDM does not need synchronization between its transmitter and receiver for proper operation.
3. Demodulation of FDM is easy.
4. Due to slow narrow band fading only a single channel gets affected.

Disadvantages of FDM:

1. The communication channel must have a very large bandwidth.
2. Intermodulation distortion takes place.
3. Large number of modulators and filters are required.
4. FDM suffers from the problem of crosstalk.
5. All the FDM channels get affected due to wideband fading.

Applications of FDM

• FDM is used for FM & AM radio broadcasting.

• FDM is used in television broadcasting.

• First generation cellular telephone also uses FDM.

B. Wavelength-Division Multiplexing

Wavelength-division multiplexing (WDM) is designed to use the high-data-rate capability of fiber-optic cable. The optical fiber data rate is higher than the data rate of metallic transmission cable, but using a fiber-optic cable for a single line wastes the available bandwidth. Multiplexing allows us to combine several lines into one. WDM is conceptually the same as FDM, except that the multiplexing and demultiplexing involve optical signals transmitted through fiber-optic channels. The idea is the same: We are combining different signals of different frequencies. The difference is that the frequencies are very high.

Figure 6. gives a conceptual view of a WDM multiplexer and demultiplexer. Very narrow bands of light from different sources are combined to make a wider band of light. At the receiver, the signals are separated by the demultiplexer.

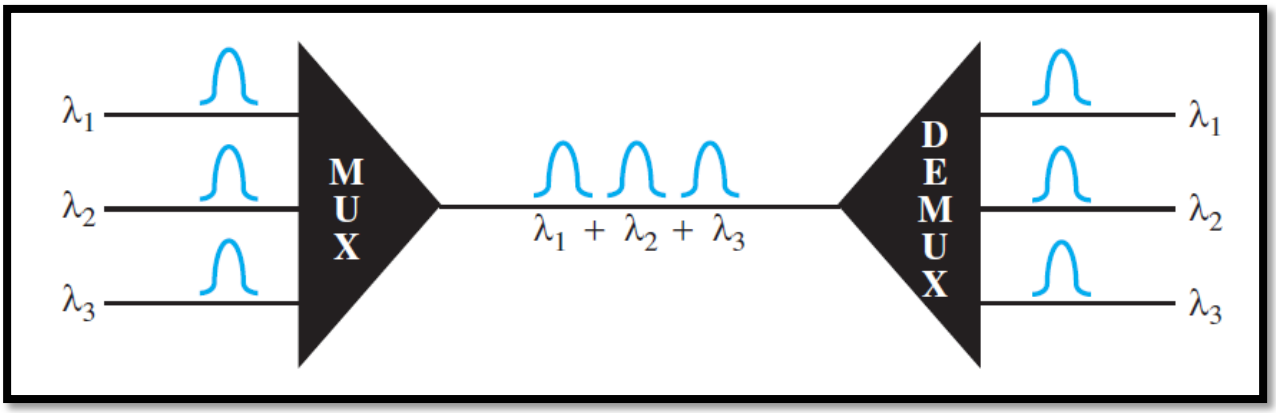

Figure 6. *Wavelength-division multiplexing*

WDM is an analog multiplexing technique to combine optical signals.

Although WDM technology is very complex, the basic idea is very simple. We want to combine multiple light sources into one single light at the multiplexer and do the reverse at the demultiplexer. The combining and splitting of light sources are easily handled by a prism. Recall from basic physics that a prism bends a beam of light based on the angle of incidence and the frequency. Using this technique, a multiplexer can be made to combine several input beams of light, each containing a narrow band of frequencies, into one output beam of a wider band of frequencies. A demultiplexer can also be made to reverse the process. Figure 7 shows the concept.

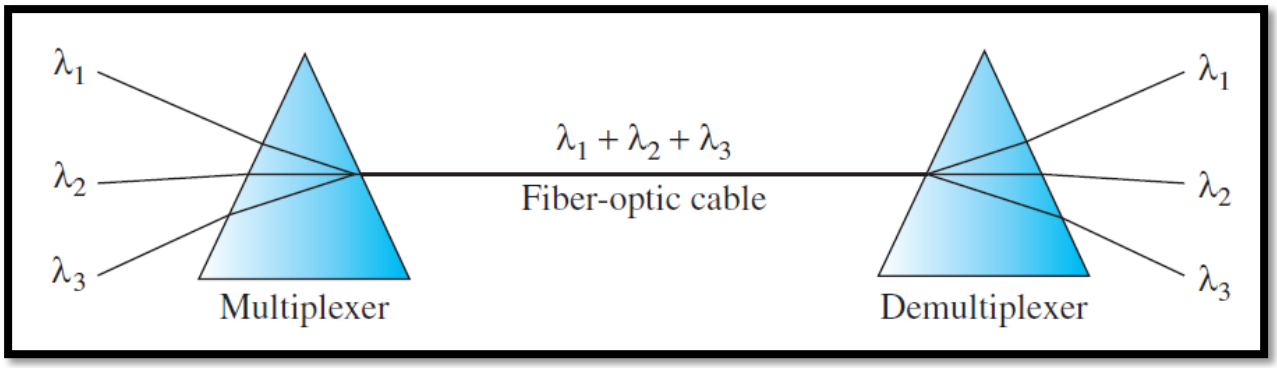

Figure 7. *Prisms in wavelength-division multiplexing and demultiplexing*

One application of WDM is the SONET network, in which multiple optical fiber lines are multiplexed and demultiplexed. A new method, called dense WDM (DWDM), can multiplex a very large number of channels by spacing channels very close to one another. It achieves even greater efficiency.

C. Time-Division Multiplexing

Time-division multiplexing (TDM) is a digital process that allows several connections to share the high bandwidth of a link. Instead of sharing a portion of the bandwidth as in FDM, time is shared. Each connection occupies a portion of time in the link. Figure 8 gives a conceptual view of TDM. Note that the same link is used as in FDM; here, however, the link is shown sectioned by time rather than by frequency. In the figure, portions of signals 1, 2, 3, and 4 occupy the link sequentially.

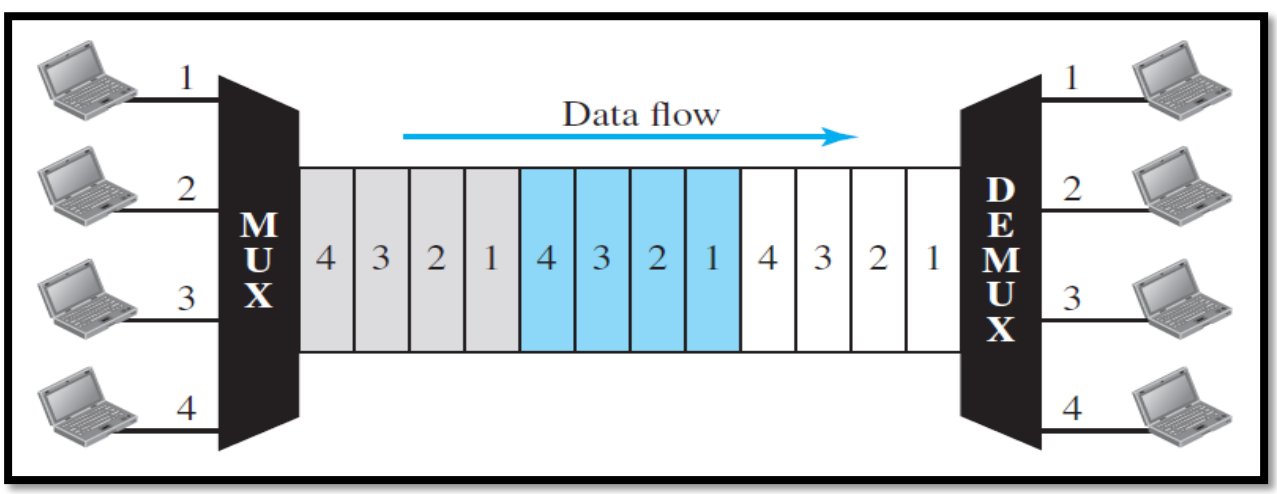

Figure 8. TDM

Note that in Figure 8 we are concerned with only multiplexing, not switching. This means that all the data in a message from source 1 always go to one specific destination, be it 1, 2, 3, or 4. The delivery is fixed and unvarying, unlike switching. We also need to remember that TDM is, in principle, a digital multiplexing technique. Digital data from different sources are combined into one timeshared link. However, this does not mean that the sources cannot produce analog data; analog data can be sampled, changed to digital data, and then multiplexed by using TDM.

TDM is a digital multiplexing technique for combining several low-rate channels into one high-rate one.

Types of TDM

1. **Synchronous TDM**
2. **Statistical (Asynchronous) TDM**

1. Synchronous TDM (STDM)

- In synchronous TDM, **each device is given same time slot** to transmit the data over the link, irrespective of the fact that the device has any data to transmit or not. Hence the name Synchronous TDM.
- Synchronous TDM requires that the total speed of various input lines should not exceed the capacity of path.
- Each device places its data onto the link when its **time slot** arrives *i.e.* each device is given the possession of line turn by turn.
- If any device does not have data to send then its **time slot remains empty**.
- The various time slots are organized into **frames** and each frame consists of one or more time slots dedicated to each sending device.
- If there are *n* sending devices, there will be *n* slots in frame *i.e.* one slot for each device. As show in fig, there are 3 input devices, so there are 3 slots in each frame.
- If there is no data to be transmitted, the buffer will be empty but still the turn of the node will come.

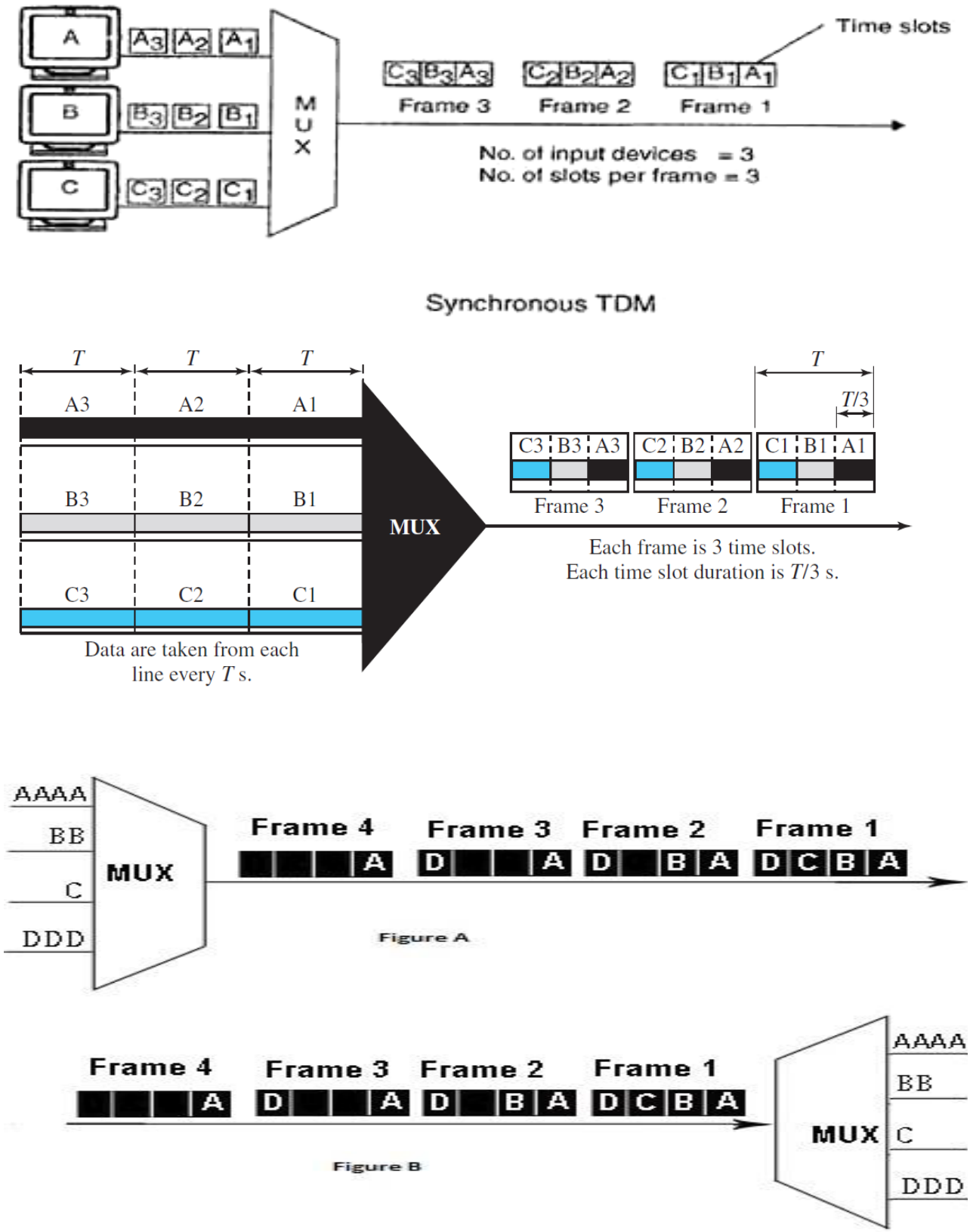

Figure 9 *Synchronous time-division multiplexing*

Advantages of Synchronous TDM :

1. Relatively simple
2. An order of data is maintained
3. No addressing information is required, channel capacity should be large.
4. Commonly used with ISDN (Integrated Services Digital Network).

Disadvantages of Synchronous TDM :

1. The channel capacity cannot be fully utilized. Some of the slots go empty in certain frames.
2. The capacity of single communication line that is used to carry the various transmission should be greater than the total speed of input lines.

2. Asynchronous TDM or statistical TDM

It is also known as **statistical** time division multiplexing.

- Asynchronous TDM is called so because is this type of multiplexing, **time slots are not fixed** *i.e.* the slots are flexible. Here, the total speed of input lines can be greater than the capacity of the path.
- In synchronous TDM, if we have *n* input lines then there are *n* slots in one frame. But in asynchronous it is not so. If we have *n* input lines then the frame contains not more than *m* slots, with *m* less than *n* $(m < n)$.
- The number of time slots in a frame is based on a statistical analysis of number of input lines.

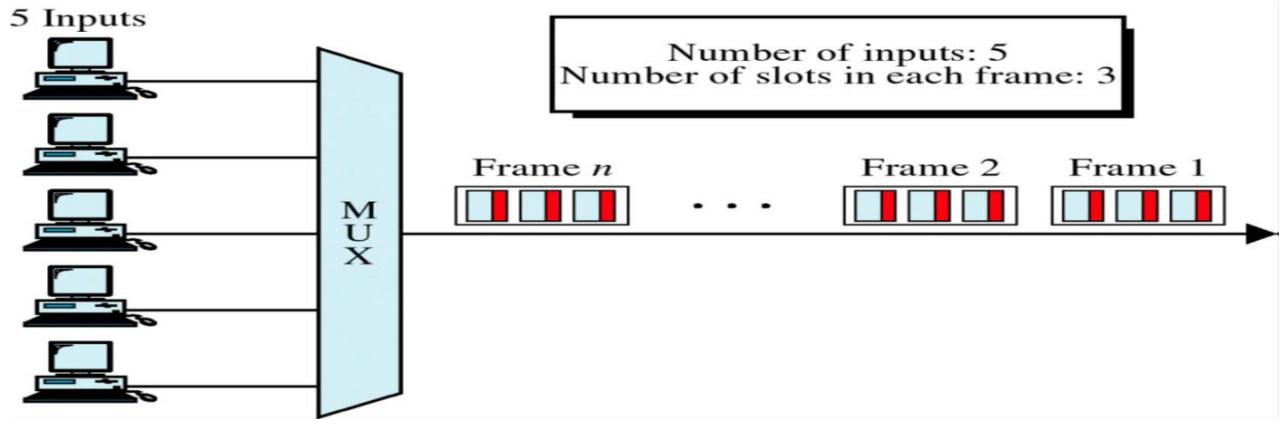

- In this system slots are not predefined; the slots are allocated to any of device that has data to send.
- The multiplexer scans the various input lines, accepts the data from the lines that have data to send, fills the frame and then sends the frame across the link.
- If there are not enough data to fill all the slots in a frame, then the frames are transmitted partially filled.
- Asynchronous Time Division Multiplexing is depicted in fig. Here we have five input lines and three slots per frame. In **Case 1**, only three out of five input lines place data onto the link *i.e.* number of input lines and number of slots per frame are same. In **Case 2**, four out of five input lines are active. Here number of input line is one more than the number of slots per frame.
- In **Case 3**, all five input lines are active. In all these cases, multiplexer scans the various lines in order and fills the frames and transmits them across the channel.
- The distribution of various slots in the frames is not symmetrical. In case 2, device 1 occupies first slot in first frame, second slot in second frame and third slot in third frame.

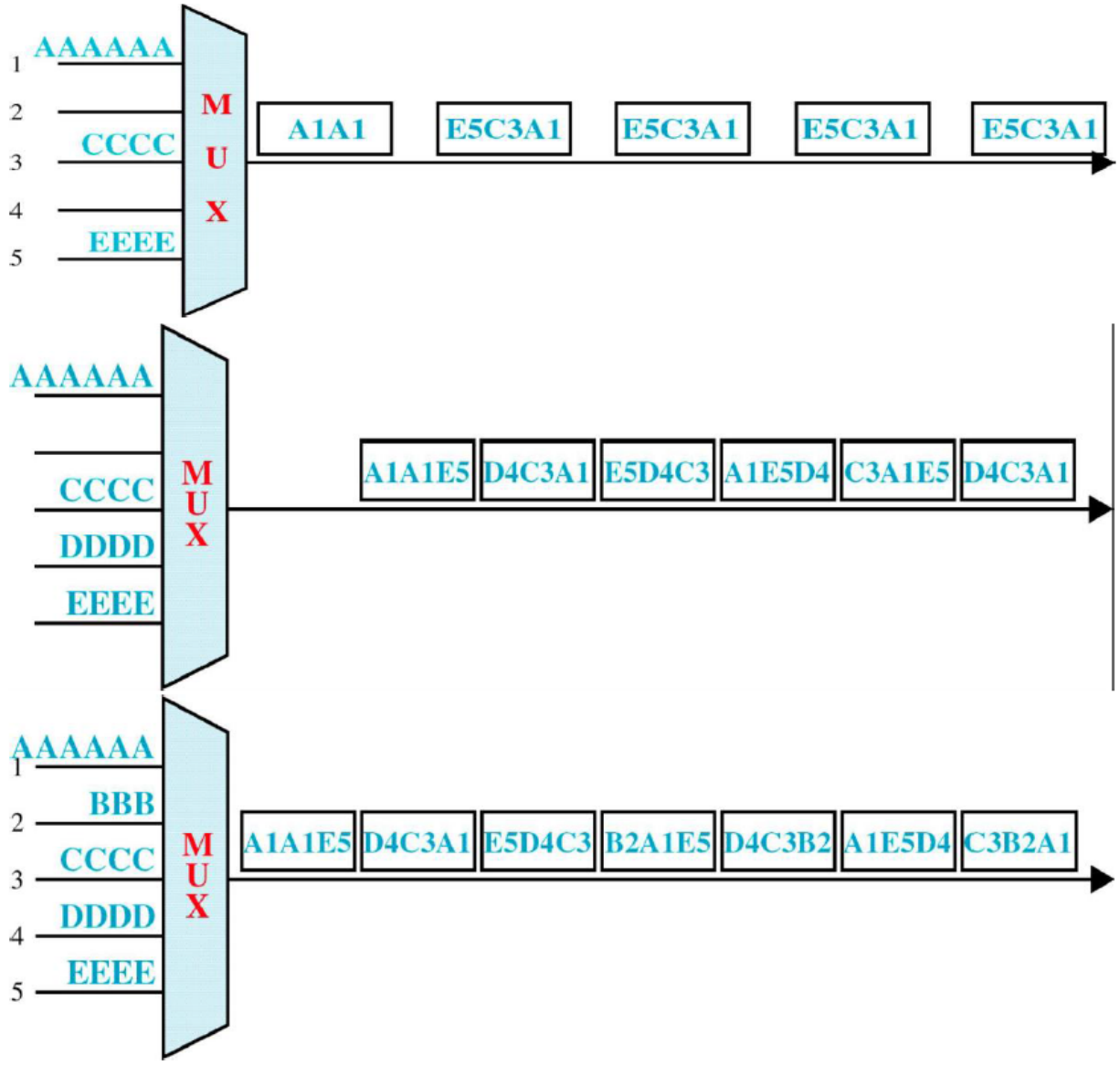

Advantages of TDM :

1. Full available channel bandwidth can be utilized for each channel.
2. lnter modulation distortion is absent.
3. TDM circuitry is not very complex.
4. The problem of crosstalk is not severe.

Disadvantages of TDM :

1. Synchronization is essential for proper operation.
2. Due to slow narrowband fading, all the TDM channels may get wiped out.

Comparison of FDM and TDM

PARAMETER	TDM	FDM
Definition	TDM is the transmission technique in which different signal are transmitted over a common channel and each signal occupies entire range of bandwidth in the time domain.	FDM is the transmission technique in which different signal are transmitted over a common channel and each signal occupies different slot within that bandwidth of the frequency domain.
Stands For	Time-Division Multiplexing	Frequency-Division Multiplexing
Useful for	TDM can be used for both Analog and Digital signals.	FDM can be used for Analog signals only.
Synchronization	TDM requires Synchronization.	not required Synchronization.
Circuit	circuitry is very simple to built.	FDM circuitry is very complex.
Cross Talk	TDM is not sensitive for Cross Talk (Noise Immunity)	FDM suffers from the cross talk immunity due to Bandpass Filter.
Requirement	TDM requires sync pulse for its operation.	FDM requires Guard bands for its operation.
Effiecient	TDM is more efficient and is widely used technique in multiplexing.	FDM is less efficient compared to TDM.
Applications	TDM is used in Pulse code modulation.	FDM is used in TV and RADIO broadcasting